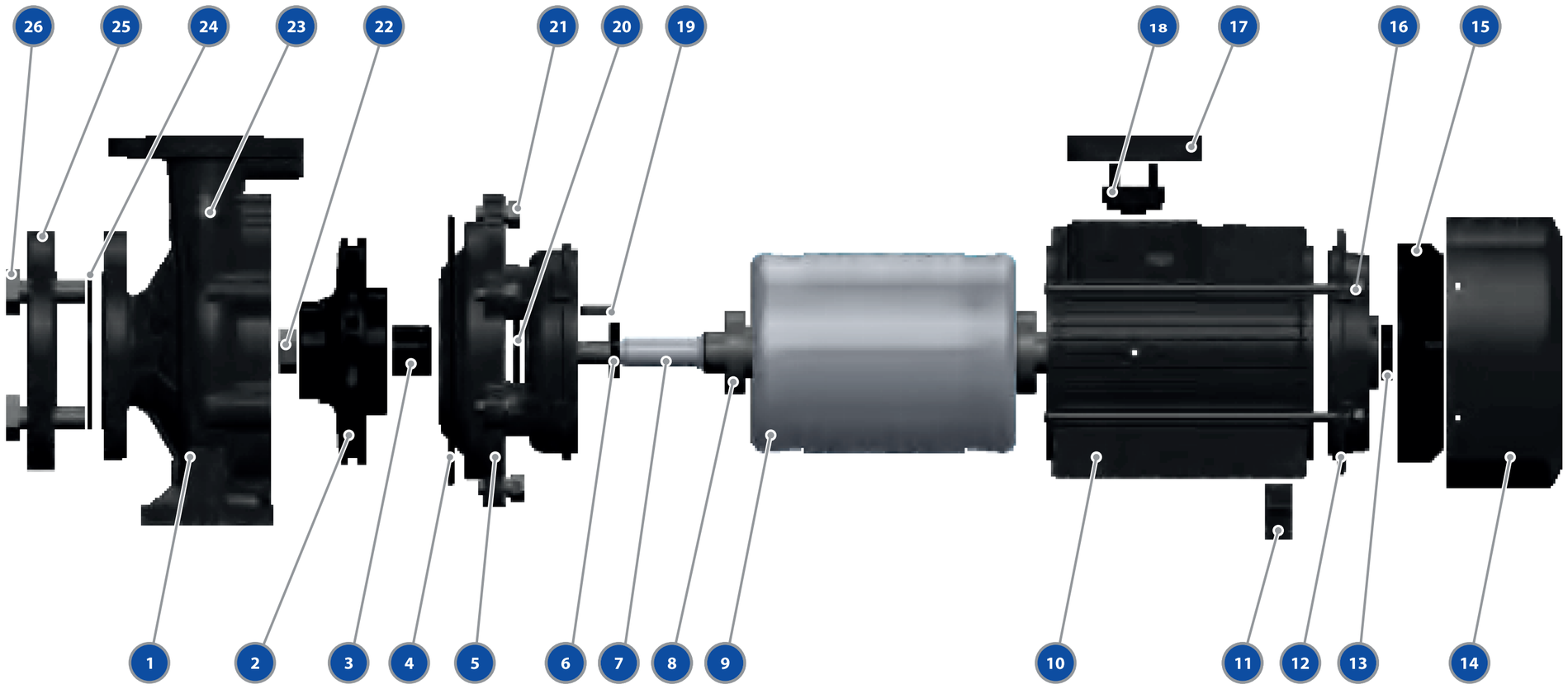
26
25
24
23
22
21
20
19
18
17
16
15
1
2
3
4
5
6
7
8
9
10
11
12
13
14

NBW

No.	NAME	Spec	Material	QTY	NBW 50-32-125/11	NBW 50-32-125/7	NBW 50-32-160/15	NBW 50-32-160/22	NBW 50-32-160/30	NBW 50-32-200/30	NBW 50-32-200/40	NBW 50-32-250/55	NBW 50-32-250/55D	NBW 50-32-250/75	NBW 65-40-125/11	NBW 65-40-125/15	NBW 65-40-125/22	NBW 65-40-160/30	NBW 65-40-160/40	NBW 65-40-200/55	NBW 65-40-200/75	NBW 65-40-250/110	NBW 65-40-250/150	NBW 65-40-250/185	NBW 65-40-250/92	NBW 65-50-125/22	NBW 65-50-125/30	NBW 65-50-125/40	NBW 65-50-160/55	NBW 65-50-160/75	NBW 65-50-200/110	NBW 65-50-200/150	NBW 65-50-200/92	NBW 65-50-250/150	NBW 65-50-250/185	NBW 80-65-125/40	NBW 80-65-125/55	NBW 80-65-125/75	NBW 80-65-160/110	NBW 80-65-160/150	NBW 80-65-160/92	NBW 80-65-200/185	NBW 80-65-200/220	NBW 80-65-250/300	NBW 80-65-315/550	NBW 100-80-125/75	NBW 100-80-160/110	NBW 100-80-160/150	NBW 100-80-160/185	NBW 100-80-160/220	NBW 100-80-200/300	NBW 100-80-250/370	NBW 100-80-250/450	NBW 125-100-160/220	NBW 125-100-200/300
1	корпус насоса (улитка)				*	*	*	*	*	*	*	*	*	*	*	*	*	*	*	*	*	*	*	*	*	*	*	*	*	*	*	*	*	*	*	*	*	*	*	*	*	*	*	*	*	*	*	*	*	*	*	*	*	*
2	рабочее колесо				295615	295614	295616	295617	295618	295619	295620	295621	295622	295623	295624	295625	295626	295627	295628	295629	295630	295631	295632	295633	295634	295635	295636	295637	295638	295639	295640	295641	295642	295643	295644	295645	295646	295647	295648	295649	295650	295651	295652	295653	295654	295655	295656	295657	295658	295659	295660	295661	295662	295663	295664
3	торцевое уплотнение				295666	295665	295667	295668	295669	295670	295671	295672	295673	295674	295675	295676	295677	295678	295679	295680	295681	295682	295683	295684	295685	295686	295687	295688	295689	295690	295691	295692	295693	295694	295695	295696	295697	295698	295699	295700	295701	295702	295703	295704	295705	295706	295707	295708	295709	295710	295711	295712	295713	295714	295715
4	уплотнительное кольцо				295717	295716	295718	295719	295720	295721	295722	295723	295724	295725	295726	295727	295728	295729	295730	295731	295732	295733	295734	295735	295736	295737	295738	295739	295740	295741	295742	295743	295744	295745	295746	295747	295748	295749	295750	295751	295752	295753	295754	295755	295756	295757	295758	295759	295760	295761	295762	295763	295764	295765	295766
5	фонарь				*	*	*	*	*	*	*	*	*	*	*	*	*	*	*	*	*	*	*	*	*	*	*	*	*	*	*	*	*	*	*	*	*	*	*	*	*	*	*	*	*	*	*	*	*	*	*	*	*	*
6	уплонительное кольцо				*	*	*	*	*	*	*	*	*	*	*	*	*	*	*	*	*	*	*	*	*	*	*	*	*	*	*	*	*	*	*	*	*	*	*	*	*	*	*	*	*	*	*	*	*	*	*	*	*	*
7	вал				295819	295818	295820	295821	295822	295823	295824	295825	295826	295827	295828	295829	295830	295831	295832	295833	295834	295835	295836	295837	295838	295839	295840	295841	295842	295843	295844	295845	295846	295847	295848	295849	295850	295851	295852	295853	295854	295855	295856	295857	295858	295859	295860	295861	295862	295863	295864	295865	295866	295867	295868
8	подшипник двигателя (нижний)mor bearing lower				309936	309935	310070	310071	310072	309937	310073	310075	310074	310076	310077	310078	310079	310081	310086	310087	310089	310092	310093	310094	*	310225	310226	310227	310228	310229	310230	310231	*	310232	310233	310210	310211	*	310212	310215	310216	310217	*	*	310218	310219	310220	310221	*	310222	*	310223	*	310224	*
9	ротор				*	*	*	*	*	*	*	*	*	*	*	*	*	*	*	*	*	*	*	*	*	*	*	*	*	*	*	*	*	*	*	*	*	*	*	*	*	*	*	*	*	*	*	*	*	*	*	*	*	*
10	корпус				*	*	*	*	*	*	*	*	*	*	*	*	*	*	*	*	*	*	*	*	*	*	*	*	*	*	*	*	*	*	*	*	*	*	*	*	*	*	*	*	*	*	*	*	*	*	*	*	*	*
11	опора				*	*	*	*	*	*	*	*	*	*	*	*	*	*	*	*	*	*	*	*	*	*	*	*	*	*	*	*	*	*	*	*	*	*	*	*	*	*	*	*	*	*	*	*	*	*	*	*	*	*
12	крышка двигателя				*	*	*	*	*	*	*	*	*	*	*	*	*	*	*	*	*	*	*	*	*	*	*	*	*	*	*	*	*	*	*	*	*	*	*	*	*	*	*	*	*	*	*	*	*	*	*	*	*	*
13	пыльник				295768	295767	295769	295770	295771	295772	295773	295774	295775	295776	295777	295778	295779	295780	295781	295782	295783	295784	295785	295786	295787	295788	295789	295790	295791	295792	295793	295794	295795	295796	295797	295798	295799	295800	295801	295802	295803	295804	295805	295806	295807	295808	295809	295810	295811	295812	295813	295814	295815	295816	295817
14	крышка вентилятора				295870	295869	295871	295872	295873	295874	295875	295876	295877	295878	295879	295880	295881	295882	295883	295884	295885	295886	295887	295888	295889	295890	295891	295892	295893	295894	295895	295896	295897	295898	295899	295900	295901	295902	295903	295904	295905	295906	295907	295908	295909	295910	295911	295912	295913	295914	295915	295916	295917	295918	295919
15	вентилятор				295972	295971	295973	295974	295975	295976	295977	295978	295979	295980	295981	295982	295983	295984	295985	295986	295987	295988	295989	295990	295991	295992	295993	295994	295995	295996	295997	295998	295999	296000	296001	296002	296003	296004	296005	296006	296007	296008	296009	296010	296011	296012	296013	296014	296015	296016	296017	296018	296019	296020	296021
16	болт				*	*	*	*	*	*	*	*	*	*	*	*	*	*	*	*	*	*	*	*	*	*	*	*	*	*	*	*	*	*	*	*	*	*	*	*	*	*	*	*	*	*	*	*	*	*	*	*	*	*
17	крышка клеммника				*	*	*	*	*	*	*	*	*	*	*	*	*	*	*	*	*	*	*	*	*	*	*	*	*	*	*	*	*	*	*	*	*	*	*	*	*	*	*	*	*	*	*	*	*	*	*	*	*	*
18	клеммник				*	*	*	*	*	*	*	*	*	*	*	*	*	*	*	*	*	*	*	*	*	*	*	*	*	*	*	*	*	*	*	*	*	*	*	*	*	*	*	*	*	*	*	*	*	*	*	*	*	*
19	крепление рабочего колеса				*	*	*	*	*	*	*	*	*	*	*	*	*	*	*	*	*	*	*	*	*	*	*	*	*	*	*	*	*	*	*	*	*	*	*	*	*	*	*	*	*	*	*	*	*	*	*	*	*	*
20	экран защитный				*	*	*	*	*	*	*	*	*	*	*	*	*	*	*	*	*	*	*	*	*	*	*	*	*	*	*	*	*	*	*	*	*	*	*	*	*	*	*	*	*	*	*	*	*	*	*	*	*	*
21	болт				*	*	*	*	*	*	*	*	*	*	*	*	*	*	*	*	*	*	*	*	*	*	*	*	*	*	*	*	*	*	*	*	*	*	*	*	*	*	*	*	*	*	*	*	*	*	*	*	*	*
22	гайка				*	*	*	*	*	*	*	*	*	*	*	*	*	*	*	*	*	*	*	*	*	*	*	*	*	*	*	*	*	*	*	*	*	*	*	*	*	*	*	*	*	*	*	*	*	*	*	*	*	*
23	клапан				*	*	*	*	*	*	*	*	*	*	*	*	*	*	*	*	*	*	*	*	*	*	*	*	*	*	*	*	*	*	*	*	*	*	*	*	*	*	*	*	*	*	*	*	*	*	*	*	*	*
24	прокладка				295921	295920	295922	295923	295924	295925	295926	295927	295928	295929	295930	295931	295932	295933	295934	295935	295936	295937	295938	295939	295940	295941	295942	295943	295944	295945	295946	295947	295948	295949	295950	295951	295952	295953	295954	295955	295956	295957	295958	295959	295960	295961	295962	295963	295964	295965	295966	295967	295968	295969	295970
25	фланец				*	*	*	*	*	*	*	*	*	*	*	*	*	*	*	*	*	*	*	*	*	*	*	*	*	*	*	*	*	*	*	*	*	*	*	*	*	*	*	*	*	*	*	*	*	*	*	*	*	*
26	болты фланца				*	*	*	*	*	*	*	*	*	*	*	*	*	*	*	*	*	*	*	*	*	*	*	*	*	*	*	*	*	*	*	*	*	*	*	*	*	*	*	*	*	*	*	*	*	*	*	*	*	*
27	motor bearing upper				309936	309935	310070	310071	310072	309937	310073	310075	310074	310076	310077	310078	310079	310081	310086	310087	310089	310092	310093	310094	*	310225	310226	310227	310228	310229	310230	310231	*	310232	310233	310210	310211	*	310212	310215	310216	310217	*	*	310218	310219	310220	310221	*	310222	*	310223	*	310224	*

* позиции под заказ